Data Sheet

Itemnumber....: 5540801209

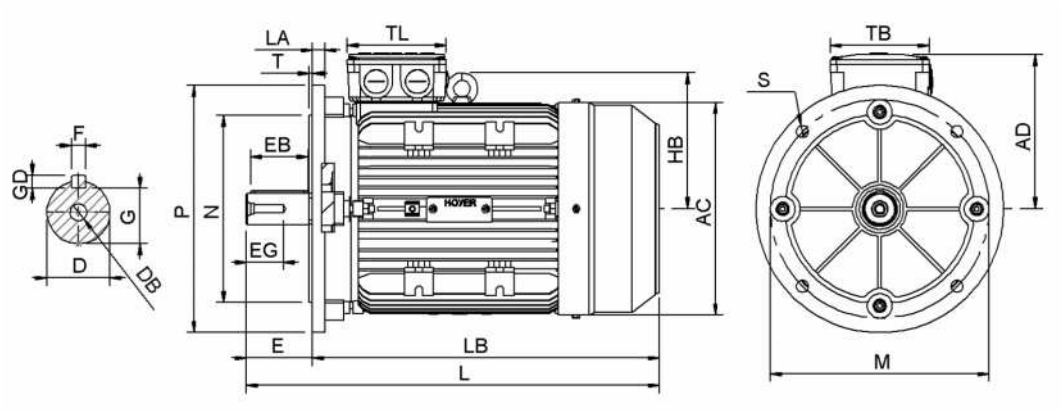

AC = 159	**DB = M6**	**EG = 16**	**GD = 6**	**LA = 10**	**M = 165**	**S = 4-Ø12**	**TL = 100**
AD = 126	**E = 40**	**F = 6**	**H = 80**	**LB = 258**	**N = 130**	**T = 3,50**	
D = 19	**EB = 32**	**G = 15,50**	**L = 298**	**LE = 287**	**P = 200**	**TB = 100**	

Version
Type.....: HMA3 80 2-4
Design.....: Induction motor
Standard series.....: IEC 60034
Phase / Voltage range.....: 3~ / Low

Electrical design
Efficiency.....: IE3
Pole.....: 4
Power at 50 Hz (kW).....: 0,75
Hz.....: 50
Voltage.....: 230VD/400VY
Winding voltage.....: 230VD/400VY 50 Hz
Power output (kW).....: 0,75
Duty.....: S1
Insulation class.....: F
Temperature rise.....: B

Motor protection
Thermal protection main....: PTC 3x 155 dgr
Thermal protection second..: None
Space heater.....: None
Temperature detector.....: No
SPM.....: No
IR wire.....: No
Tropical insulation.....: No

Explosion protection
According to.....: None
Type of protection.....: None

General
Direction of rotation.....: CW
Painting.....: RAL 9005 Gloss 10
Nameplate.....: Multivoltage
Special packing.....: No
Special requirements.....: No

Mechanical design
Frame size.....: 80
Mounting.....: B5
Rain cap.....: No
Protection class.....: IP55
Cooling method.....: IC411/TEFC
External grounding.....: Yes
Drain hole.....: Yes
Frame material.....: Aluminium
Material approval.....: None
Shaft.....: IEC standard
Key.....: Closed key
Balancing.....: Half key balancing
Vibration class.....: Grade-A
Weight (kg).....: 13,0

Environment condition
Ambient temp. min. (°C)..: -20
Ambient temp. max. (°C)..: 40
Altitude (mtr up to).....: 1000

Bearing
DE Bearing.....: 6204-ZZ/C3
NDE Bearing.....: 6204-ZZ/C3
Fixed bearing.....: DE

Terminal box
Tbox position.....: Top
Cable entry direction.....: Right (from DE)
Cable entry
Main.....: 2 x M20x1,5
Plastic blindcaps
Accessory.....: NA
Connection type.....: Star (Y)
Terminal board thread.....: 6-M4

Test values
Rotor inertia (kgm²).....: 0,0026
Noise level (dB(A)).....: 49
No load current (A).....: 1,14
Winding resist. (ohm).....: 6,67
Starting time (sec.).....: 0,03
Temp. rise winding (K).....: 49
Temp. rise surface (K).....: 27

Rated power (kW) .....:	0,75	0,73	0,90	0,87
Frequency (Hz) .....:	50	50	60	60
Voltage (V) .....:	230 400	220 380	280 480	440
Connection .....:	D Y	D Y	D Y	Y
Full load current (A) ...:	3,15 1,80	3,25 1,86	3,15 1,80	1,86
Speed (rpm) .....:	1440	1440	1730	1730
Power factor cos(phi) ...:	0,73	0,74	0,73	0,76
Efficiency, 100/75/50 (%) :	82,5/82,9/81,0	82,5/82,9/81,0	82,5/82,9/81,0	81,3/81,7/79,6
Ist/In .....:	6,7	5,9	6,7	6,1
Full load torque (Nm) ...:	4,95	4,80	4,95	4,80
Tst/Tn .....:	3,0	2,8	3,0	2,6
Tmax /Tn .....:	3,3	3,1	3,3	2,9
Duty .....:	S1	S1	S1	S1
Ambient temp. (°C) .....:	40	45	40	45

Data are not binding. Hoyer reserves the right to implement changes without notice. The extent of data are not equivalent to nameplate on the motors.