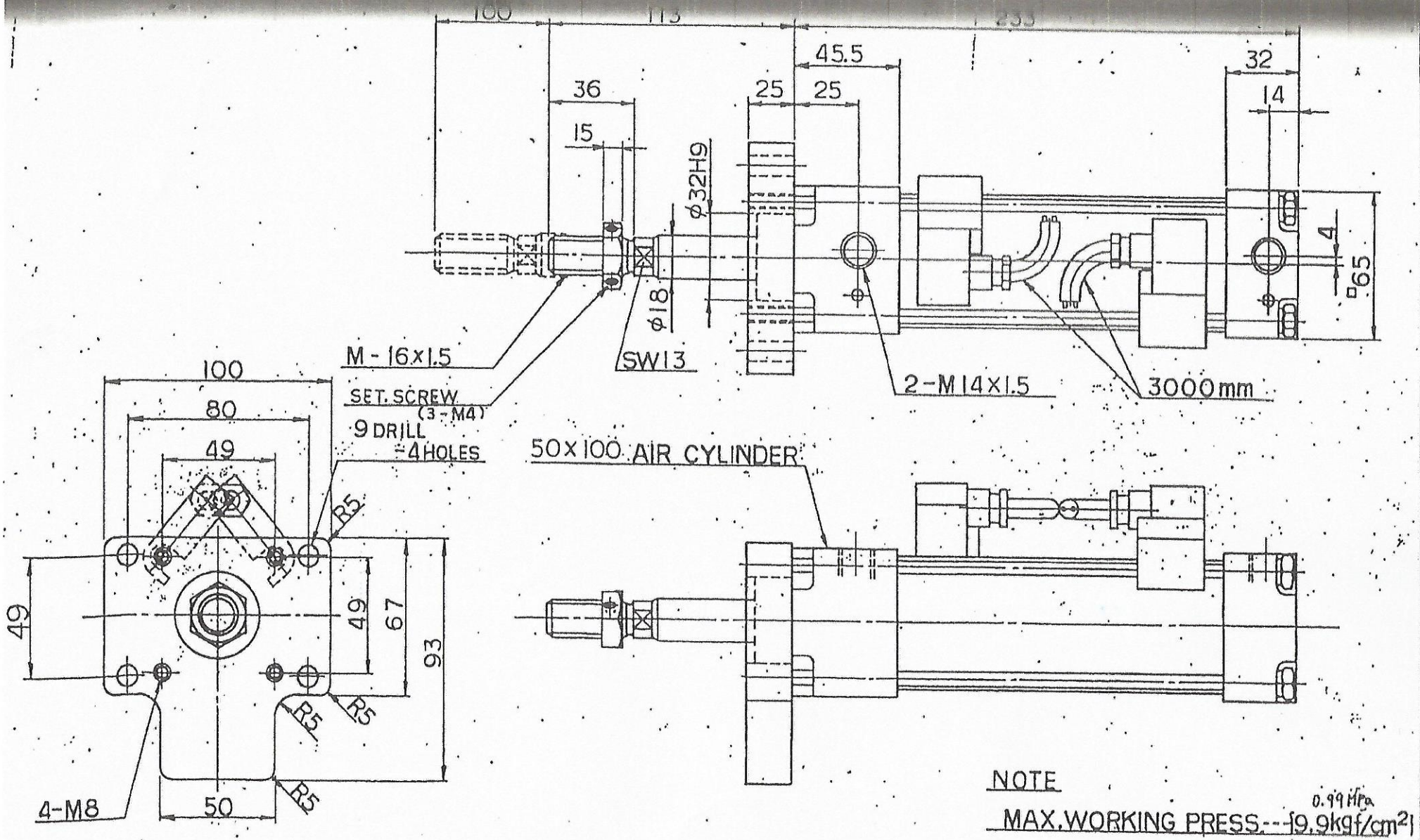

NOTE

MAX. WORKING PRESS.--{9.9kgf/cm²} 0.99 MPa

REV. MARK	NOTE	DATE	DESIGNED	CHK.	APVD.	MATERIAL	NAME	REVERSING CYL. UNIT (φ50x100)	
	M: 73746792	'95.11.27	小野	東	石地	WEIGHT			
						RELATION NO.			
						SCALE	CODE NO. D22	DWG. NO. 737 48603	

TECHNICAL DEPART.