NOTICE
THIS DRAWING IS THE PROPERTY OF QualiTROL COMPANY LLC AND IS LOANED ONLY ON THE CONDITION THAT IT WILL BE USED TO FACILITATE THE PURPOSE FOR WHICH INTENDED AND NOT BE REPRODUCED, COPIED OR OTHERWISE DISPOSED OF, AND IS NOT TO BE USED IN WHOLE OR PART FOR FURNISHING INFORMATION RELATIVE TO THE MAKING OF DRAWINGS, PARTS APPARATUS OR PARTS THEREOF, EXCEPT BY WRITTEN ORDER FROM QualiTROL COMPANY LLC.

MODEL NO. 900–025

NOTES: UNLESS SPECIFIC OTHERWISE
1. MEETS QUALITROL PRODUCT PERFORMANCE SPECIFICATION PPS–9.
2. FOR OIL SPACE INSTALLATION ONLY.
3. UNIT MUST BE MOUNTED HORIZONTALLY WITH VENT UP AS SHOWN.

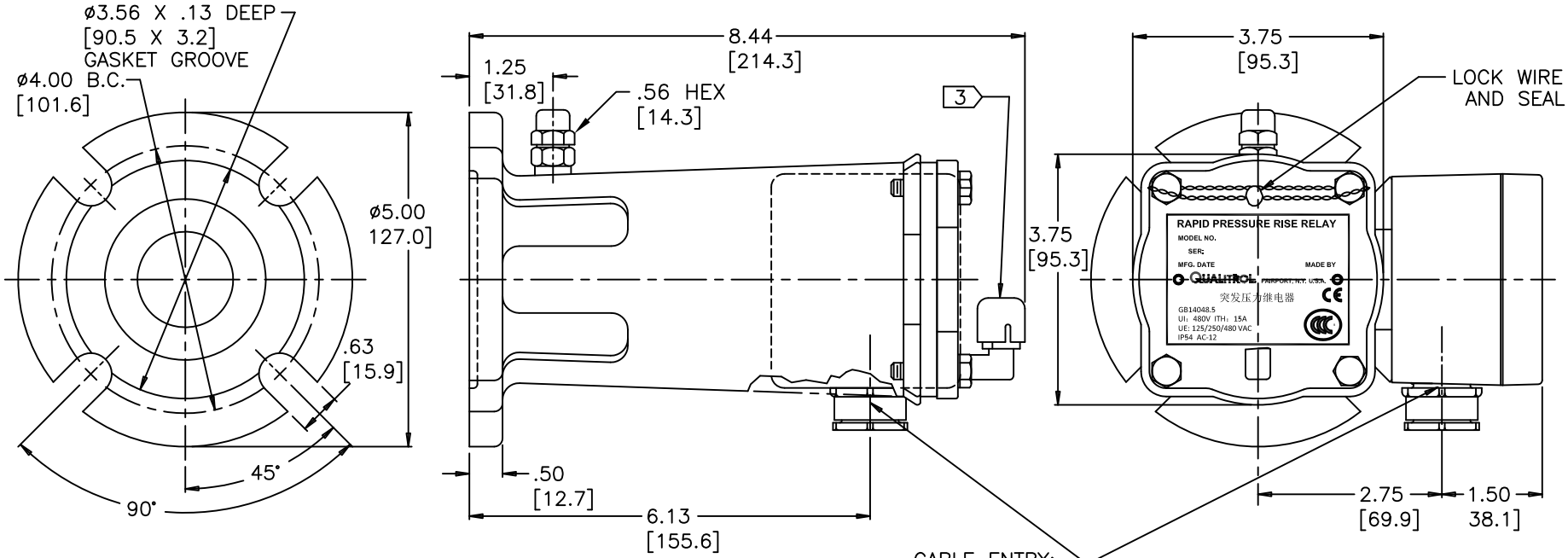

– BASE –
SHOWN FOR MOUNTING ONLY

CABLE ENTRY:
FITTED WITH PG–16 CABLE GRIP OR ACCOMMODATES
1/2" CONDUIT FITTING WITH STOPNUT AND LOCKNUT

WIRING DIAGRAM

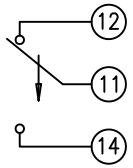

AT RAPID PRESSURE RISE,
11 OPENS ON 12 AND CLOSES ON 14

REVISION	MODEL NUMBER	SWITCH RATINGS	REMARKS	LOW TEMP TEST
26330 11–13–07	900–025–01	15 AMP @ 125, 250, 480 VAC .5 AMP @ 125 VDC – NON–INDUCTIVE .25 AMP @ 250 VDC – NON–INDUCTIVE	REPLACES 900–021–01	–––
26330 11–13–07	900–025–02	.10 AMP @ 125 VAC	REPLACES 900–021–02	–––
26330 11–13–07	900–025–03	15 AMP @ 125, 250, 480 VAC .5 AMP @ 125 VDC – NON–INDUCTIVE .25 AMP @ 250 VDC – NON–INDUCTIVE	INCLUDES TEST BUTTON REPLACES 900–021–03	–––
26330 11–13–07	900–025–04	15 AMP @ 125, 250, 480 VAC .5 AMP @ 125 VDC – NON–INDUCTIVE .25 AMP @ 250 VDC – NON–INDUCTIVE	INCLUDES TEST BUTTON REPLACES 900–021–04	–55°C
26330 11–13–07	900–025–61	15 AMP @ 125, 250, 480 VAC .5 AMP @ 125 VDC – NON–INDUCTIVE .25 AMP @ 250 VDC – NON–INDUCTIVE	INCLUDES ADD'L VENT REPLACES 900–021–61	–––

LET	DATE	ALTERATION	C.N.
–	4–15–13	REV NAMEPLATE FOR CCC/CE	31153
–	11–13–07	RELEASED	26330

QUALITROL®
PH. (585) 586–1515
FAX (585) 377–0220
1385 FAIRPORT ROAD
FAIRPORT, NY 14450

DIMENSIONS AND TOLERANCES IN ACCORDANCE WITH ASME Y14.5M–1994
FORM 0–473 REV. F 04/06/06

TITLE: RAPID PRESSURE RISE RELAY (OIL)

MODEL NO. 900–025